GENERAL NOTES:

1. TRAFFIC SHALL BE MAINTAINED IN ACCORDANCE WITH FDOT DESIGN STANDARDS INDEX 102-600 SERIES.
2. IT IS THE RESPONSIBILITY OF THE CONTRACTOR TO MAINTAIN CLEAR ZONE REQUIREMENTS FOR EQUIPMENT AND MATERIALS STORAGE AND WORK ZONE PROTECTION.
3. THE HOURS OF CONSTRUCTION SHALL BE LIMITED TO MONDAY THRU FRIDAY, 7:00 AM TO 6:00 PM, PER OSCEOLA COUNTY LAND DEVELOPMENT CODE.
4. LOCAL RESIDENTIAL/BUSINESS ACCESS SHALL BE MAINTAINED AT ALL TIMES. CONTRACTOR SHALL PROVIDE WRITTEN NOTIFICATION TO THE RESIDENTS/BUSINESS AFFECTED BY CONSTRUCTION ACTIVITIES ONE (1) WEEK IN ADVANCE OF THE START OF ANY PHASE OF CONSTRUCTION.
5. CONSTRUCTIONOPERATIONS SHALL COMPLY WITH ALL LOCAL CITY AND COUNTY NOISE ORDINANCES.
6. HEAVY TRAFFIC CONDITIONS, ACCIDENTS AND ANY OTHER UNFORSEEN EMERGENCY MAY REQUIRE RESTRICTION OR TEMPORARY STOPPAGE OF CONSTRUCTION ACTIVITIES, THE CONTRACTOR SHALL MAKE THE NECESSARY ADJUSTMENTS WITHOUT DELAY AT THE DIRECTION OF THE ENGINNER. ALL LANES MUST BE REOPENED TO NORMAL TRAFFIC WITHIN 12 HOURS OF NOTICE OF EVACUATION DUE TO A HURRICANE OR ANY OTHER CATASTROPHICEVENT AND SHALL REMAIN OPEN FOR THE DURATION OF THE EVACUATION OR EVENT AS DIRECTED BY THE ENGINEER.
7. THE LOCATION OF ALL TRAFFIC CONTROL DEVICES SHOWN IN THE PLANS ARE APPROXIMATE ONLY AND SHALL BE ADJUSTED BY THE TRAFFIC CONTROL SUPERVISOR TO MEET ACTUAL FIELD CONDITIONS.
8. THE CONTRACTOR SHALL MAINTAIN ONE LANE OF TRAFFIC IN EACH DIRECTION AT ALL TIMES DURING CONSTRUCTION AND SHALL NOT ALLOW CONSTRUCTION EQUIPMENT OR ACTIVITIES. LANE CLOSURES ARE NOT PERMITTED WITHOUT PRIOR APPROVAL FROM OSCEOLA COUNTY.
9. TRAFFIC SHALL BE MAINTAINED ON PAVED SURFACES AT ALL TIMES.
10. MINIMUM LANE WIDTHS WILL BE TWELVE (12) FEET FOR THRU AND TURN LANES, UNLESS OTHERWISE SHOWN ON THE PLANS.
11. THE SPEED LIMIT THROUGH THE WORK ZONE DURING EACH PHASE SHALL BE 30 OR 35 MPH AS SHOWN ON THE PLANS.
12. ALL REQUIRED TRAFFIC CONTROL DEVICES (TEMPORARY SIGNS, PAVEMENT MARKINGS, BARRIER WALL, ETC.) REQUIRED DURING A CONSTRUCTION PHASE SHALL BE INSTALLED AND APPROVED BY THE COUNTY ENGINEER PRIOR TO COMMENCEMENT OF CONSTRUCTION AND SHALL BE MAINTAINED IN ACCORDANCE WITH THE STATE OF FLORIDA DEPARTMENT OF TRANSPORTATION STANDARD PLANS, INDEX NO. 100-600 SERIES AND THE FHWA "MANUAL OF UNIFORM TRAFFIC CONTROL DEVICES" (LATEST EDITION).
13. ALL WORK ZONES AND WORK SIGNS SHALL BE MORE THAN 2 FEET FROM THE TRAVELED WAY.
14. ALL SIGNS AND TRAFFIC CONTROL DEVICES SHALL BE NEW OR LIKE NEW CONDITION. ALL SIGNS SHALL BE POST MOUNTED UNLESS OTHERWISE NOTED.
15. ALL NECESSARY EXCAVATION AND EROSION CONTROL DEVICES SHALL BE IN ACCORDANCE WITH FDOT STANDARD SPECIFICATIONS.
16. MAINTAIN ANY PEDESTRIAN AND BICYCLE MOVEMENTS AT ALL TIMES.
17. NARCOOSSEE ROAD SHALL MAINTAIN EXISTING SPEEDS. CONTRACTOR SHALL COORDINATE WITH THE COUNTY FOR ANY TEMPORARY TRAFFIC CONTROL RELATED WORK ALONG NARCOOSEE ROAD.
18. THE CONTRACTOR SHALL DETERMINE THE DESIGN OF ALL TEMPORARY PAVEMENT IN A MANNER ACCEPTABLE TO OSCEOLA COUNTY.
19. WORK ZONE LIMITS ARE BASED ON CONSTRUCTION PLANS PROVIDED BY POULOS & BENNETT, DATED 03/16/2023.
20. THE CONTRACTOR SHALL USE PORTABLE CHANGEABLE MESSAGE SIGNS (PCMS) TO NOTIFY THE TRAVELING PUBLIC OF UPCOMING CONSTRUCTION AND TRAFFIC CHANGES. PCMS SHALL BE PLACED AS SHOWN IN THE PLANS. MESSAGES FOR THE PCMS SHALL BE AS INDICATED BELOW OR AS DIRECTED BY THE ENGINEER AS APPLICABLE.

A. STARTING TWO (2) WEEKS PRIOR TO START OF CONSTRUCTION AND/OR TRAFFIC PATTER CHANGES.

PCMS MESSAGE 1

ROAD WORK BEGINS	BEGINS [DATE] [HOURS]

PCMS MESSAGE 2

TRAFFIC PATTERN CHANGE	BEGINS [DATE]

B. STARTING WITH A NEW TRAFFIC PATTERN AND LASTING UP TO TWO (2) WEEKS AFTER.

PCMS MESSAGE 3

NEW TRAFFIC PATTERN	USE CAUTION

C. DURING CONSTRUCTION.

PCMS MESSAGE 4

ROAD WORK AHEAD	EXPECT DELAYS

PCMS MESSAGE 5

PERIODIC LANE CLOSURES	[FROM HOUR] UNTIL [TO HOUR]

CONSTRUCTION PHASE NOTES:

PHASE 1A (NARCOOSSEE ROAD TO FRANKLIN ROAD)

1. INSTALL EROSION CONTROL DEVICES.
2. MAINTAIN TRAFFIC ON EXISTING LANES UTILIZING LANE SHIFT PER PLANS.
3. CONSTRUCT EASTBOUND LANES FROM LAKE AJAY TO FRANKLIN ROAD AS WELL AS TEMPORARY ASPHALT FOR PHASE 1B.
4. BEGIN INSTALL OF TEMPORARY SHEET PILE WALL.
5. BEGIN NORTH SIDE LAKE AJAY MUCK REMOVAL.

PHASE 1B (NARCOOSSEE ROAD TO FRANKLIN ROAD)

1. INSTALL EROSION CONTROL DEVICES.
2. SHIFT TRAFFIC TO NEWLY CONSTRUCTED TEMPORARY ASPHALT AND EASTBOUND LANES.
3. COMPLETE INSTALL OF TEMPORARY SHEET PILE WALL.
4. COMPLETE NORTH SIDE LAKE AJAY MUCK REMOVAL.
5. CONSTRUCT WESTBOUND LANES WEST OF FRANKLIN ROAD AS WELL AS TEMPORARY ASPHALT FOR PHASE 1C.

PHASE 1C

1. INSTALL EROSION CONTROL DEVICES.
2. MAINTAIN TRAFFIC AS IN PHASE 1B, UTILIZING EXISTING LANES EAST OF FRANKLIN ROAD.
3. CONSTRUCT WESTBOUND LANES WEST OF FRANKLIN ROAD.
4. CONSTRUCT EASTBOUND LANES EAST OF FRANKLIN ROAD.

PHASE 2

1. INSTALL EROSION CONTROL DEVICES.
2. SHIFT TRAFFIC TO NEWLY CONSTRUCTED WESTBOUND ROADWAY WEST OF ZUNI ROAD AND EASTBOUND ROADWAY EAST OF FRANKLIN ROAD.
3. SOUTH SIDE LAKE AJAY MUCK REMOVAL.
4. CONSTRUCT NEW EASTBOUND LANES WEST OF ZUNI ROAD AND NEW WESTBOUND LANES EAST OF FRANKLIN ROAD.

PHASE 3

1. INSTALL EROSION CONTROL DEVICES.
2. SHIFT TRAFFIC TO NEWLY CONSTRUCTED OUTSIDE WESTBOUND AND EASTBOUND LANES.
3. CONSTRUCT REMAINING INSIDE TRAVEL LANES, LEFT TURN LANES, RAISED MEDIANS, SIGNAGE, AND PAVEMENT MARKINGS PER ROADWAY PLANS.

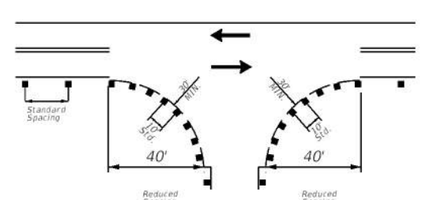

TYPICAL DRIVEWAY DETAIL

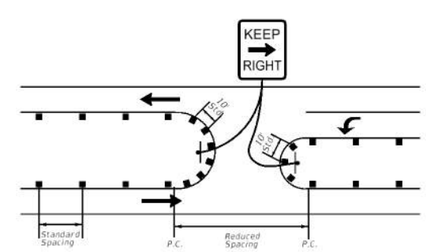

TYPICAL PHASE 3 MEDIAN OPENING DETAIL

REVISIONS			
DATE	DESCRIPTION	DATE	DESCRIPTION

TMC Traffic & Mobility Consultants

TRAFFIC & MOBILITY CONSULTANTS LLC
3101 MAGUIRE BLVD, SUITE 265
ORLANDO, FL 32803
OFFICE: (407) 531-5332
FAX: (407) 531-5331
JEREMY M. CROWE, P.E. 77064
CERTIFICATE OF AUTHORIZATION NO.: 30024

OSCEOLA COUNTY

GENERAL NOTES

SHEET NO. 219

THE OFFICIAL RECORD OF THIS SHEET IS THE ELECTRONIC FILE DIGITALLY SIGNED AND SEALED UNDER RULE 61G15-23.004, F.A.C.

5/5/2023 11:38:10 AM kv
P:\21190 Cyrils Dr-Narcossee Rd to Absher Rd-Rd Widening\300 - CADD\21190111111\Roadway\GNTRD01.dgn

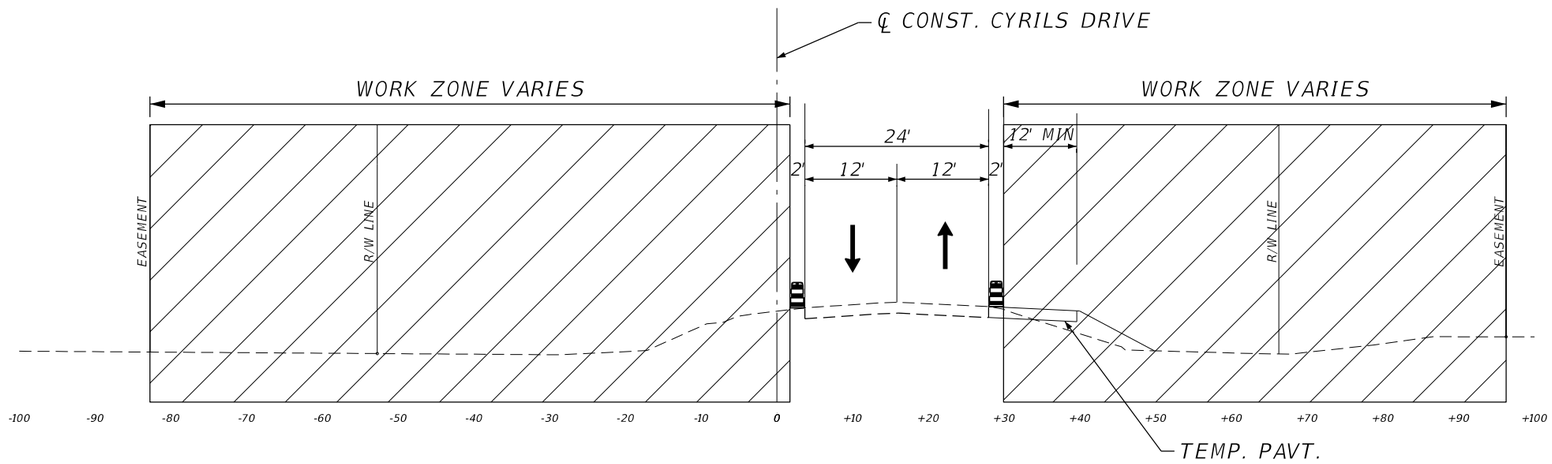

PHASE 1A - TYPICAL SECTION 1
DEMUCKING LIMITS
STA. 15+00 TO STA. 31+00

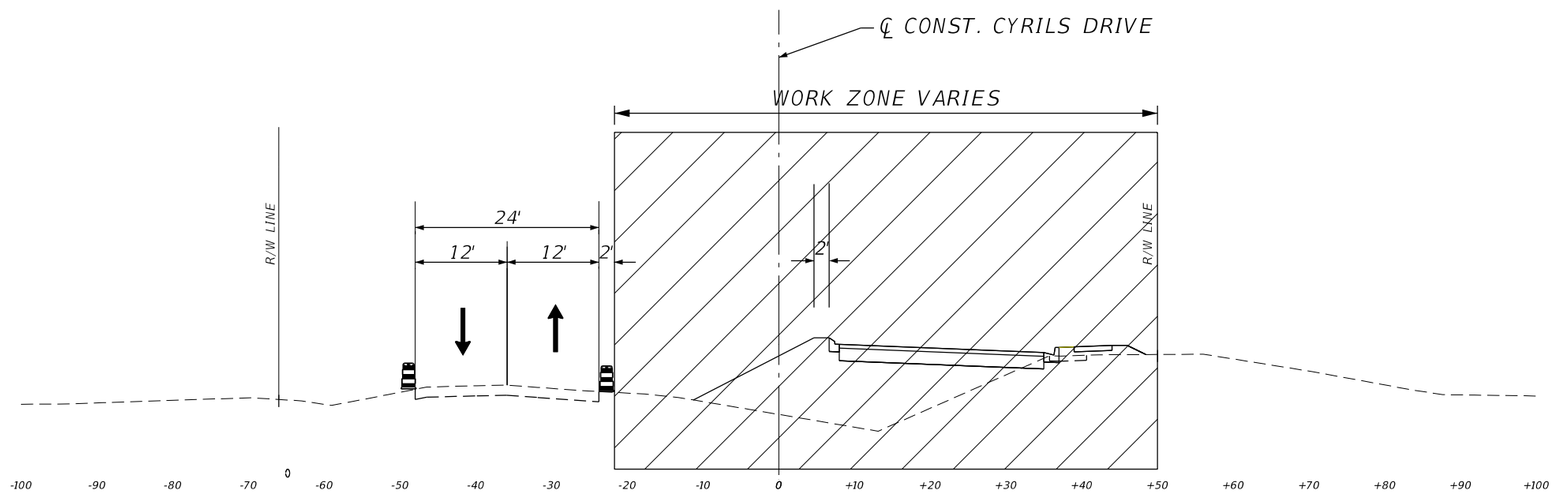

PHASE 1A - TYPICAL SECTION 2
RECONSTRUCTION LIMITS
STA. 31+00 TO STA. 52+50

REVISIONS			
DATE	DESCRIPTION	DATE	DESCRIPTION

TRAFFIC & MOBILITY CONSULTANTS LLC
3101 MAGUIRE BLVD, SUITE 265
ORLANDO, FL 32803
OFFICE: (407) 531-5332
FAX: (407) 531-5331
JEREMY M. CROWE, P.E. 77064
CERTIFICATE OF AUTHORIZATION: 30024

OSCEOLA COUNTY

TYPICAL SECTIONS

SHEET NO.
219A

THE OFFICIAL RECORD OF THIS SHEET IS THE ELECTRONIC FILE DIGITALLY SIGNED AND SEALED UNDER RULE 61G15-23.004, F.A.C.

5/5/2023 2:25:11 PM kv
P:\21190 Cyrils Dr-Narcossee Rd to Absher Rd-Rd Widening\300_CADD\21190111111\Roadway\TYPSRD01.dgn

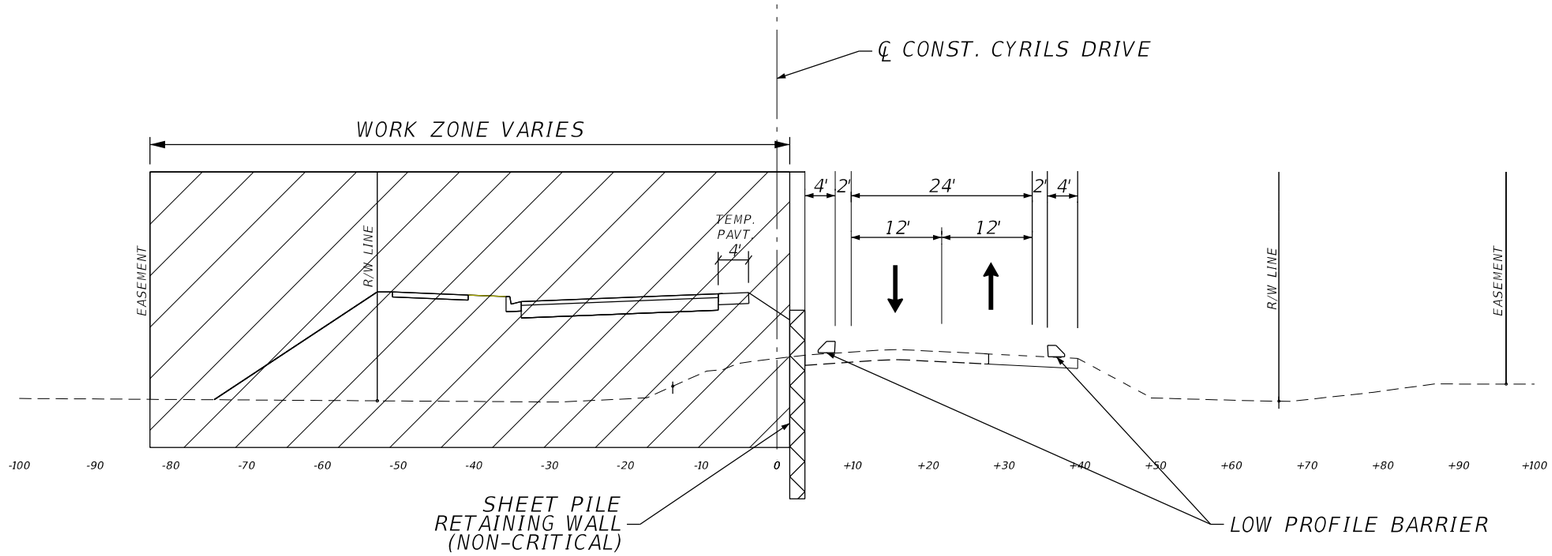

PHASE 1B - TYPICAL SECTION 3
RECONSTRUCTION LIMITS
STA. 15+00 TO STA. 25+50
STA. 26+50 TO STA. 31+00

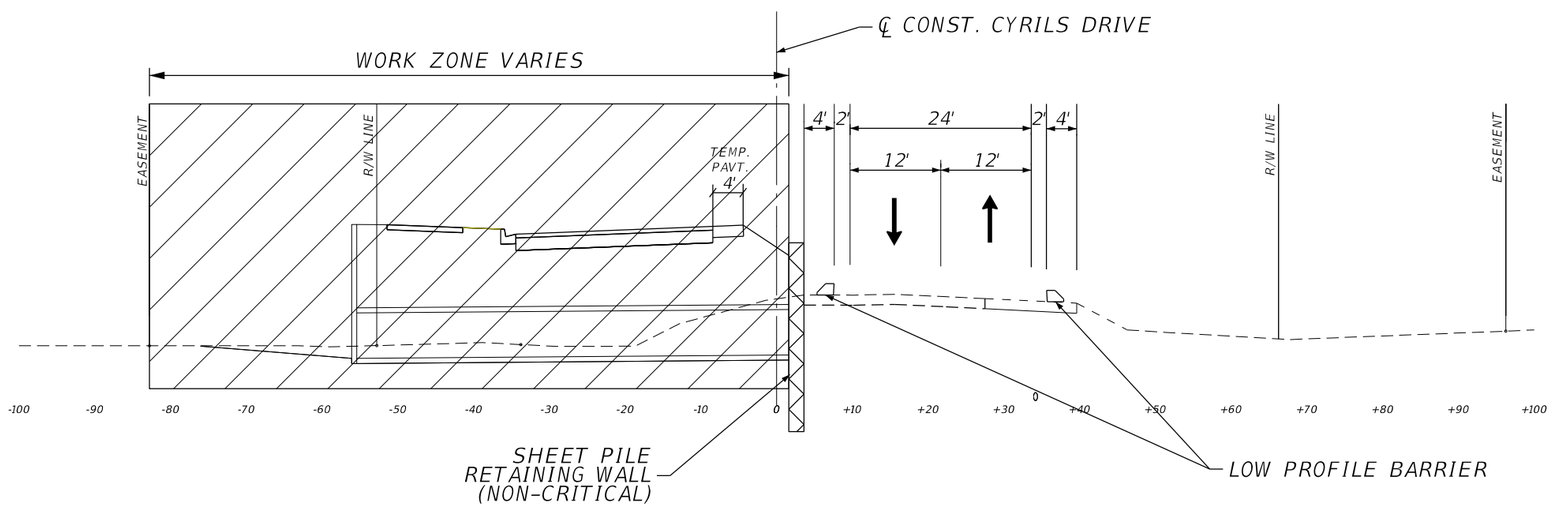

PHASE 1B - TYPICAL SECTION 4
PIPE CULVERT LIMITS
STA. 25+50 TO STA. 26+50

REVISIONS			
DATE	DESCRIPTION	DATE	DESCRIPTION

TRAFFIC & MOBILITY CONSULTANTS LLC
3101 MAGUIRE BLVD, SUITE 265
ORLANDO, FL 32803
OFFICE: (407) 531-5332
FAX: (407) 531-5331
JEREMY M. CROWE, P.E. 77064
CERTIFICATE OF AUTHORIZATION: 30024

OSCEOLA COUNTY

TYPICAL SECTIONS

SHEET NO.
219B

THE OFFICIAL RECORD OF THIS SHEET IS THE ELECTRONIC FILE DIGITALLY SIGNED AND SEALED UNDER RULE 61G15-23.004, F.A.C.

5/5/2023 2:25:11 PM kv
P:\21190 Cyrils Dr-Narcossee Rd to Absher Rd-Rd Widening\300_CADD\21190111111\Roadway\TYPSRD01.dgn

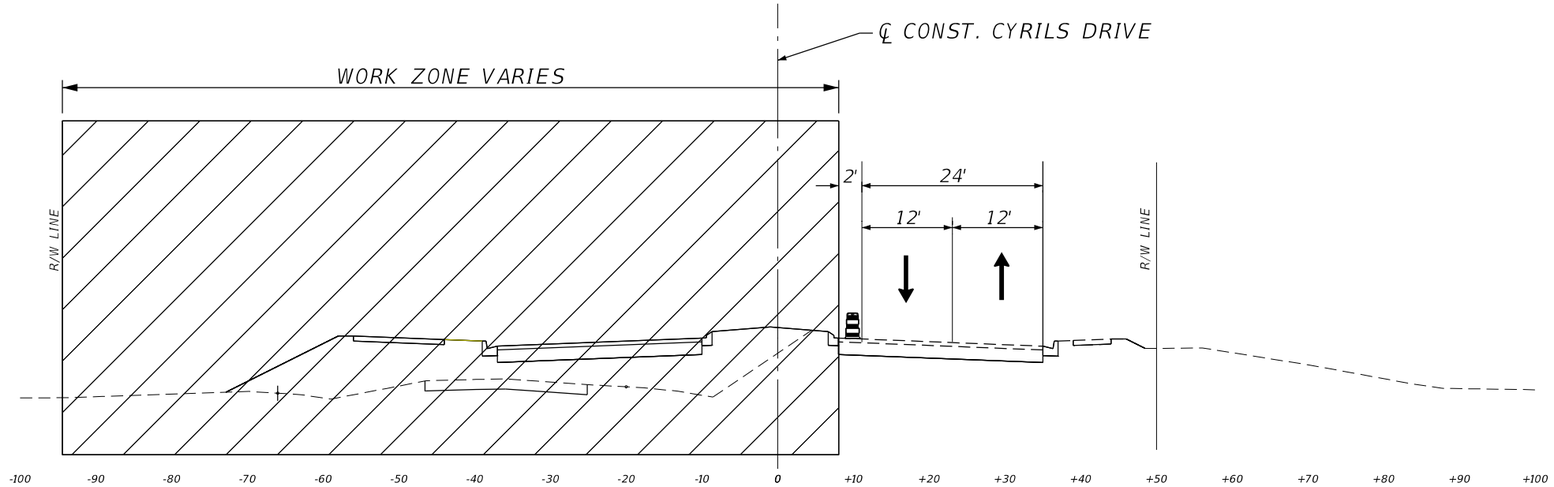

PHASE 1B - TYPICAL SECTION 5
RECONSTRUCTION LIMITS
STA. 31+00 TO STA. 52+50

THE OFFICIAL RECORD OF THIS SHEET IS THE ELECTRONIC FILE DIGITALLY SIGNED AND SEALED UNDER RULE 61G15-23.004, F.A.C.

5/5/2023 2:25:11 PM kv
P:\21190 Cyrils Dr-Narcossee Rd to Absher Rd-Rd Widening\300_CADD\211901111\Roadway\TYPSRD01.dgn

REVISIONS			
DATE	DESCRIPTION	DATE	DESCRIPTION

TRAFFIC & MOBILITY CONSULTANTS LLC
3101 MAGUIRE BLVD, SUITE 265
ORLANDO, FL 32803
OFFICE: (407) 531-5332
FAX: (407) 531-5331
JEREMY M. CROWE, P.E. 77064
CERTIFICATE OF AUTHORIZATION: 30024

OSCEOLA COUNTY

TYPICAL SECTIONS

SHEET NO.
219C

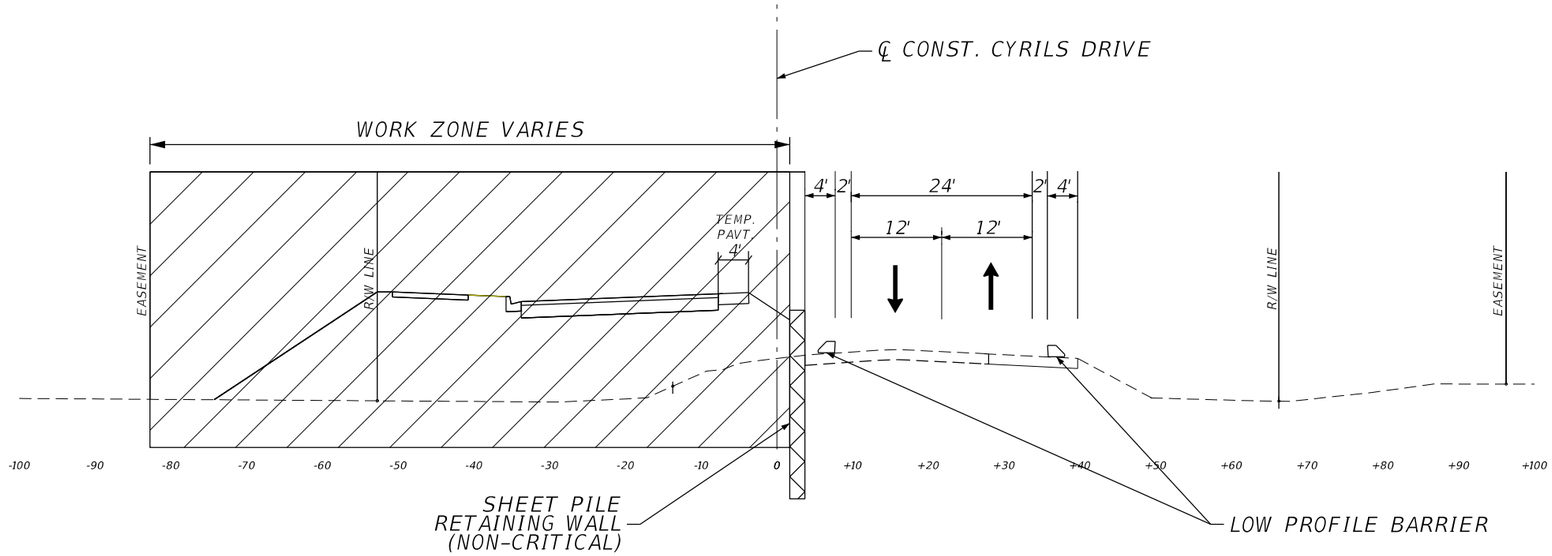

PHASE 1C - TYPICAL SECTION 6
RECONSTRUCTION LIMITS
STA. 15+00 TO STA. 25+50
STA. 26+50 TO STA. 31+00

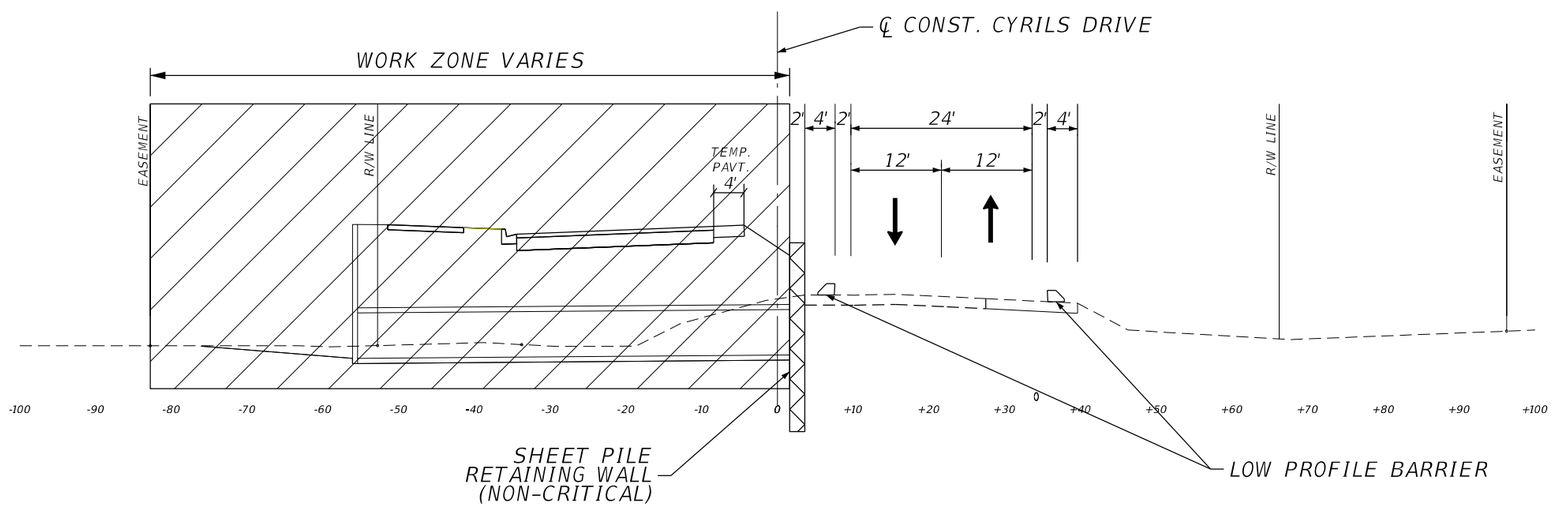

PHASE 1C - TYPICAL SECTION 7
PIPE CULVERT LIMITS
STA. 25+50 TO STA. 26+50

REVISIONS			
DATE	DESCRIPTION	DATE	DESCRIPTION

TRAFFIC & MOBILITY CONSULTANTS LLC
3101 MAGUIRE BLVD, SUITE 265
ORLANDO, FL 32803
OFFICE: (407) 531-5332
FAX: (407) 531-5331
JEREMY M. CROWE, P.E. 77064
CERTIFICATE OF AUTHORIZATION: 30024

OSCEOLA COUNTY

TYPICAL SECTIONS

SHEET NO.
219D

THE OFFICIAL RECORD OF THIS SHEET IS THE ELECTRONIC FILE DIGITALLY SIGNED AND SEALED UNDER RULE 61G15-23.004, F.A.C.

5/5/2023 2:25:12 PM kv
P:\21190 Cyrils Dr-Narcoossee Rd to Absher Rd-Rd Widening\300_CADD\211901111\11\Roadway\TYPSRD01.dgn

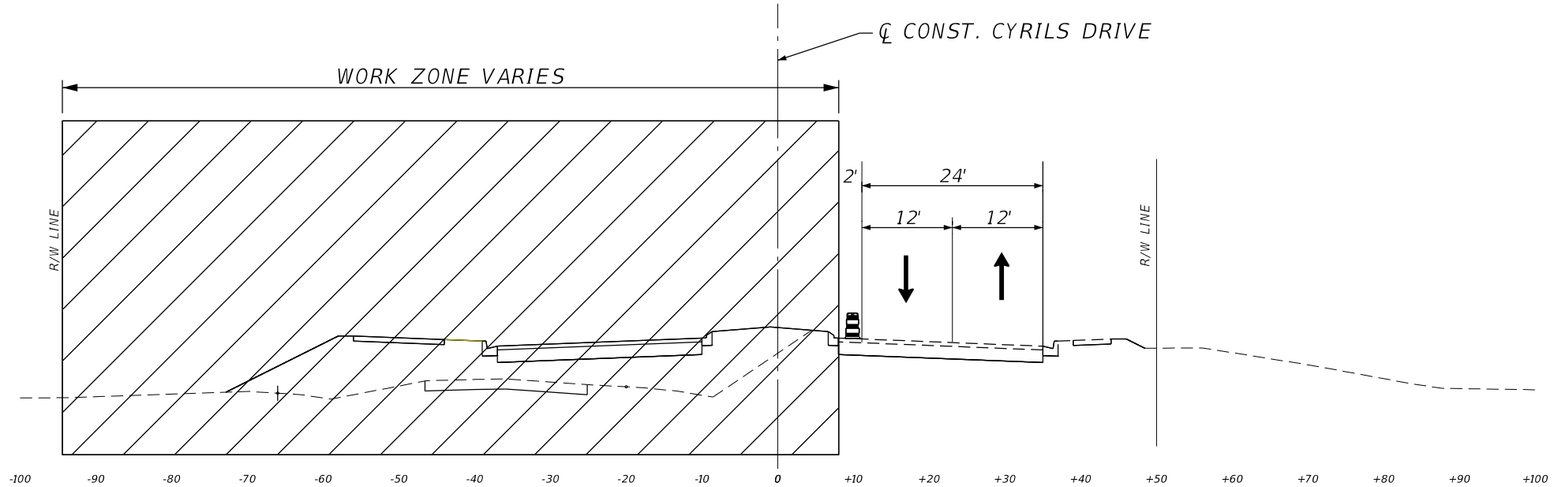

PHASE 1C - TYPICAL SECTION 8
RECONSTRUCTION LIMITS
STA. 31+00 TO STA. 52+50

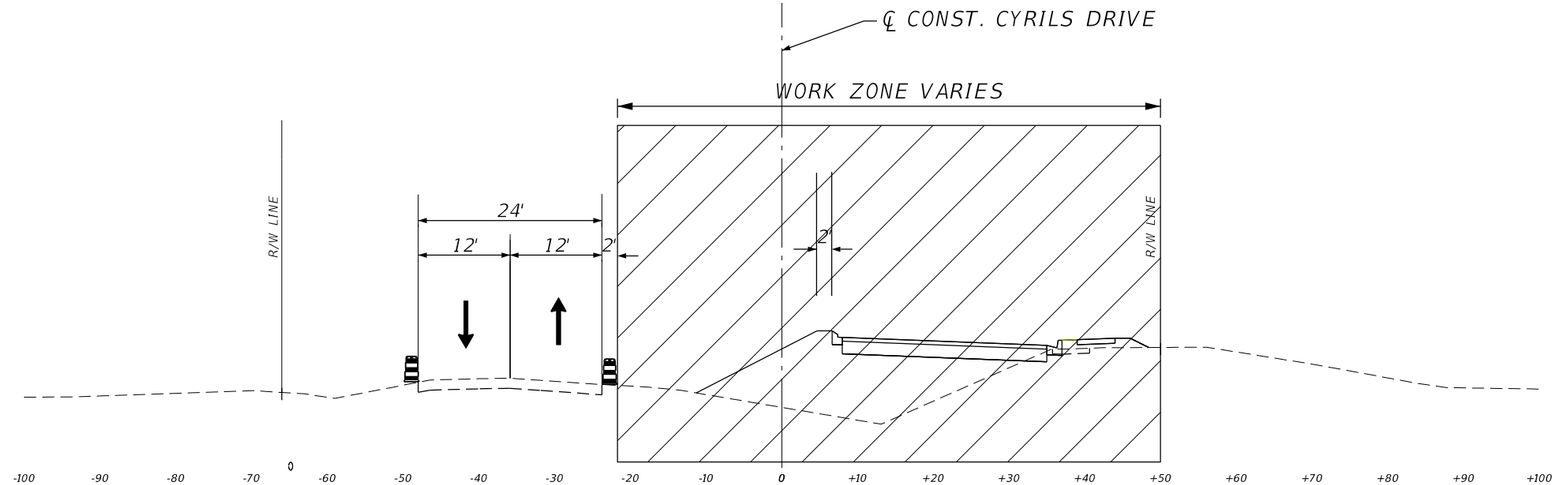

PHASE 1C - TYPICAL SECTION 9
RECONSTRUCTION LIMITS
STA. 52+50 TO STA. 117+50

REVISIONS			
DATE	DESCRIPTION	DATE	DESCRIPTION

TRAFFIC & MOBILITY CONSULTANTS LLC
3101 MAGUIRE BLVD, SUITE 265
ORLANDO, FL 32803
OFFICE: (407) 531-5332
FAX: (407) 531-5331
JEREMY M. CROWE, P.E. 77064
CERTIFICATE OF AUTHORIZATION: 30024

OSCEOLA COUNTY

TYPICAL SECTIONS

SHEET NO.
219E

THE OFFICIAL RECORD OF THIS SHEET IS THE ELECTRONIC FILE DIGITALLY SIGNED AND SEALED UNDER RULE 61G15-23.004, F.A.C.

5/5/2023 2:25:12 PM kv
P:\21190 Cyrils Dr-Narcossee Rd to Absher Rd-Rd Widening\300_CADD\21190111111\Roadway\TYPSRD01.dgn

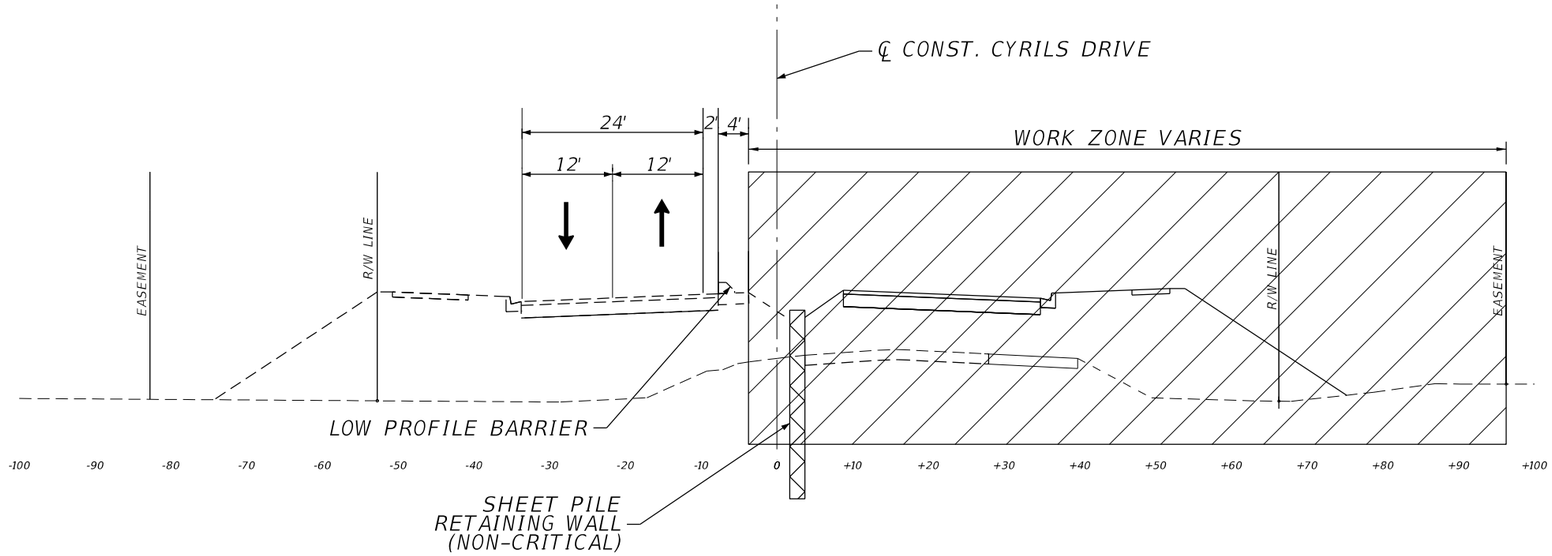

PHASE 2 - TYPICAL SECTION 10
DEMUCKING & RECONSTRUCTION LIMITS
STA. 15+00 TO STA. 25+50
STA. 26+50 TO STA. 34+00

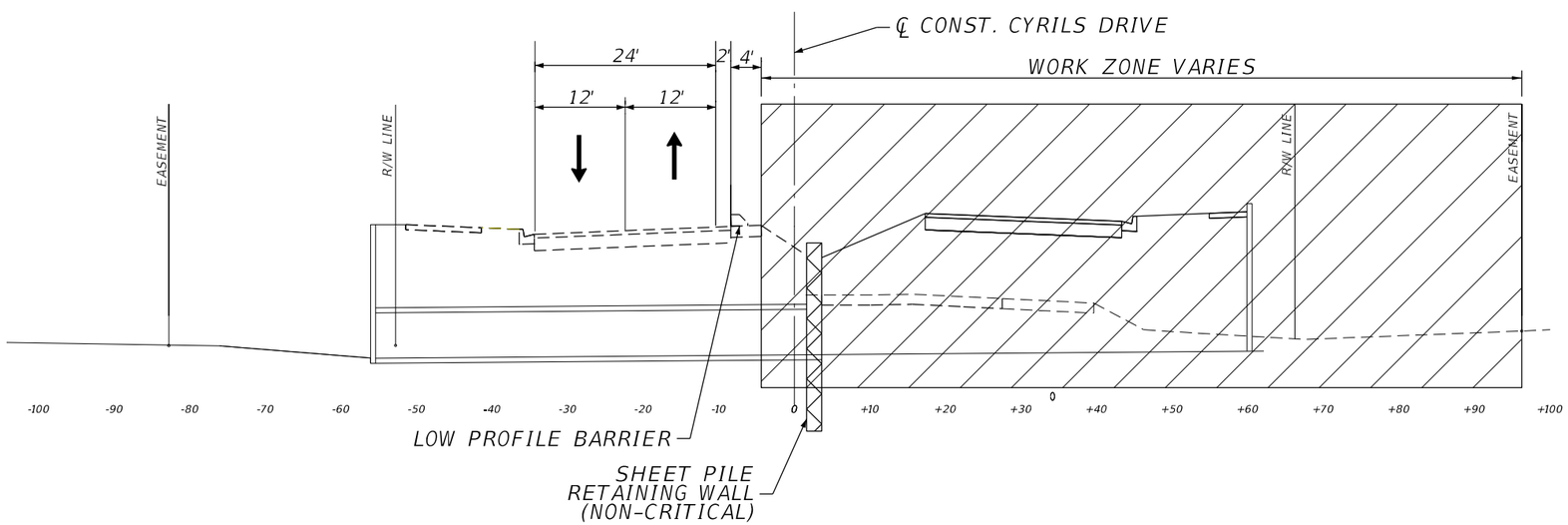

PHASE 2 - TYPICAL SECTION 11
PIPE CULVERT LIMITS
STA. 25+50 TO STA. 26+50

REVISIONS			
DATE	DESCRIPTION	DATE	DESCRIPTION

TRAFFIC & MOBILITY CONSULTANTS LLC
3101 MAGUIRE BLVD, SUITE 265
ORLANDO, FL 32803
OFFICE: (407) 531-5332
FAX: (407) 531-5331
JEREMY M. CROWE, P.E. 77064
CERTIFICATE OF AUTHORIZATION: 30024

OSCEOLA COUNTY

TYPICAL SECTIONS

SHEET NO.
219F

THE OFFICIAL RECORD OF THIS SHEET IS THE ELECTRONIC FILE DIGITALLY SIGNED AND SEALED UNDER RULE 61G15-23.004, F.A.C.

5/5/2023 2:25:12 PM kv
P:\21190 Cyrils Dr-Narcossee Rd to Absher Rd-Rd Widening\300_CADD\21190111111\Roadway\TYPSRD01.dgn

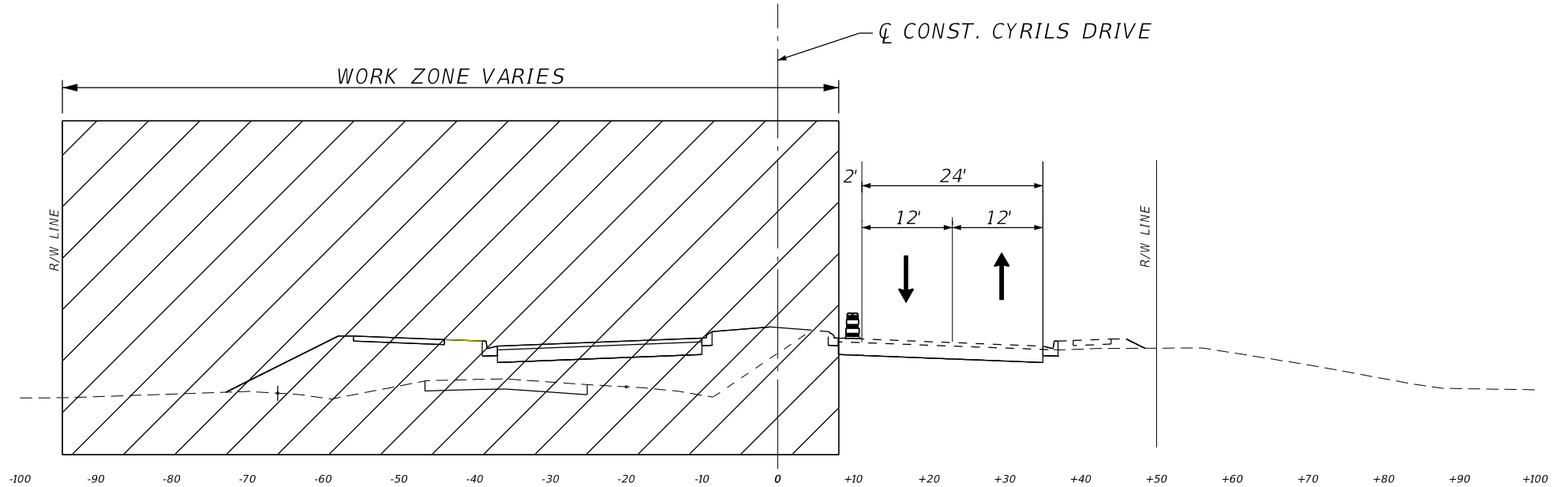

PHASE 2 - TYPICAL SECTION 12
RECONSTRUCTION LIMITS
STA. 34+00 TO STA. 117+50

THE OFFICIAL RECORD OF THIS SHEET IS THE ELECTRONIC FILE DIGITALLY SIGNED AND SEALED UNDER RULE 61G15-23.004, F.A.C.

5/5/2023 2:25:12 PM kv
P:\21190 Cyrils Dr-Narcossee Rd to Absher Rd-Rd Widening\300_CADD\21190111111\Roadway\TYPSRD01.dgn

REVISIONS			
DATE	DESCRIPTION	DATE	DESCRIPTION

TRAFFIC & MOBILITY CONSULTANTS LLC
3101 MAGUIRE BLVD, SUITE 265
ORLANDO, FL 32803
OFFICE: (407) 531-5332
FAX: (407) 531-5331
JEREMY M. CROWE, P.E. 77064
CERTIFICATE OF AUTHORIZATION: 30024

OSCEOLA COUNTY

TYPICAL SECTIONS

SHEET NO.
219G

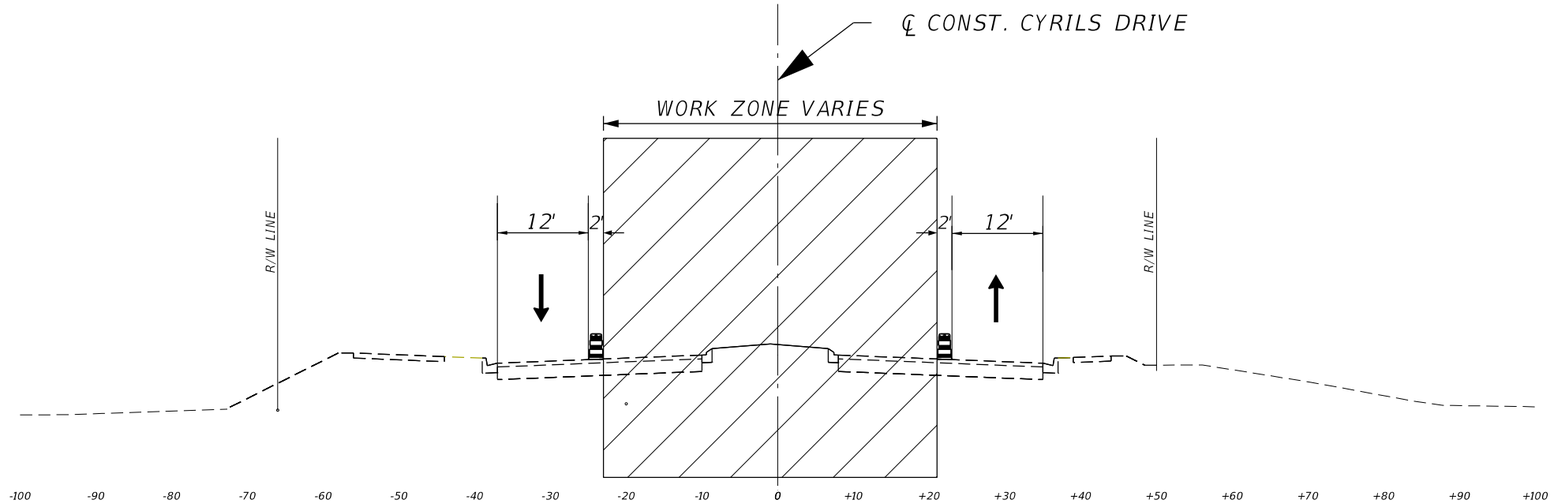

PHASE 3 - TYPICAL SECTION 13
RECONSTRUCTION LIMITS
STA. 15+00 TO STA. 117+50

REVISIONS			
DATE	DESCRIPTION	DATE	DESCRIPTION

TRAFFIC & MOBILITY CONSULTANTS LLC
3101 MAGUIRE BLVD, SUITE 265
ORLANDO, FL 32803
OFFICE: (407) 531-5332
FAX: (407) 531-5331
JEREMY M. CROWE, P.E. 77064
CERTIFICATE OF AUTHORIZATION: 30024

OSCEOLA COUNTY

TYPICAL SECTIONS

SHEET NO.
219H

THE OFFICIAL RECORD OF THIS SHEET IS THE ELECTRONIC FILE DIGITALLY SIGNED AND SEALED UNDER RULE 61G15-23.004, F.A.C.

5/5/2023 2:25:13 PM kv
P:\21190 Cyrils Dr-Narcossee Rd to Absher Rd-Rd Widening\300_CADD\21190111111\Roadway\TYPSRD01.dgn

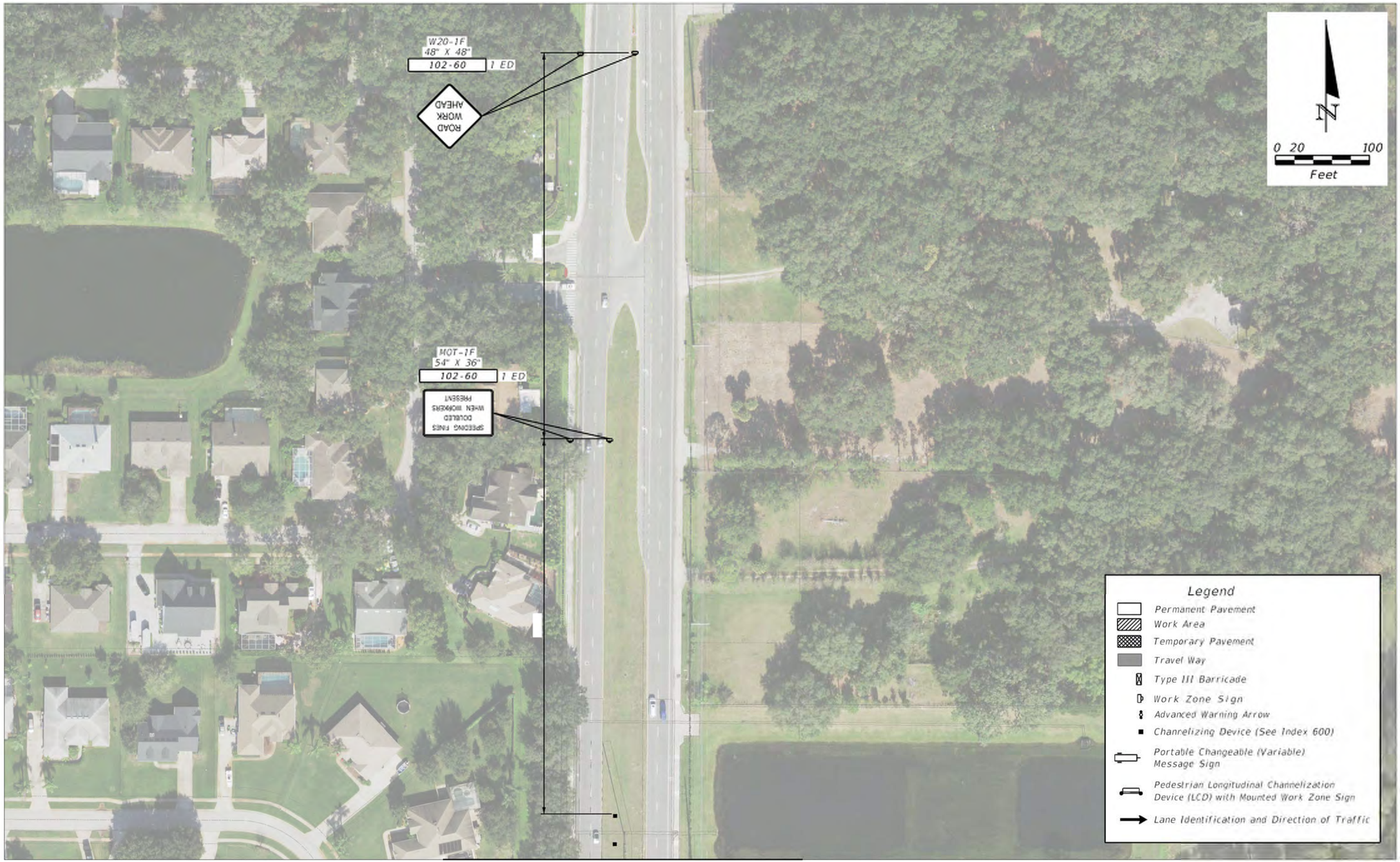

MATCH LINE SHEET 220

REVISIONS			
DATE	DESCRIPTION	DATE	DESCRIPTION

TRAFFIC & MOBILITY CONSULTANTS LLC
3101 MAGUIRE BLVD, SUITE 265
ORLANDO, FL 32803
OFFICE: (407) 531-5332
FAX: (407) 531-5331
AYMAN H. AS-SAIDI, P.E. 56849
CERTIFICATE OF AUTHORIZATION: 30024

OSCEOLA COUNTY

PHASE-1A

TEMPORARY TRAFFIC CONTROL PLAN

SHEET NO.
2191

THE OFFICIAL RECORD OF THIS SHEET IS THE ELECTRONIC FILE DIGITALLY SIGNED AND SEALED UNDER RULE 61G15-23.004, F.A.C.

5/5/2023 3:25:33 PM kv
P:\21190 Cyrils Dr-Narcissee Rd to Absher Rd-Rd Widening\300 CADD\21190111111\Roadway\TCDSBD 01-Phase 1A.dgn

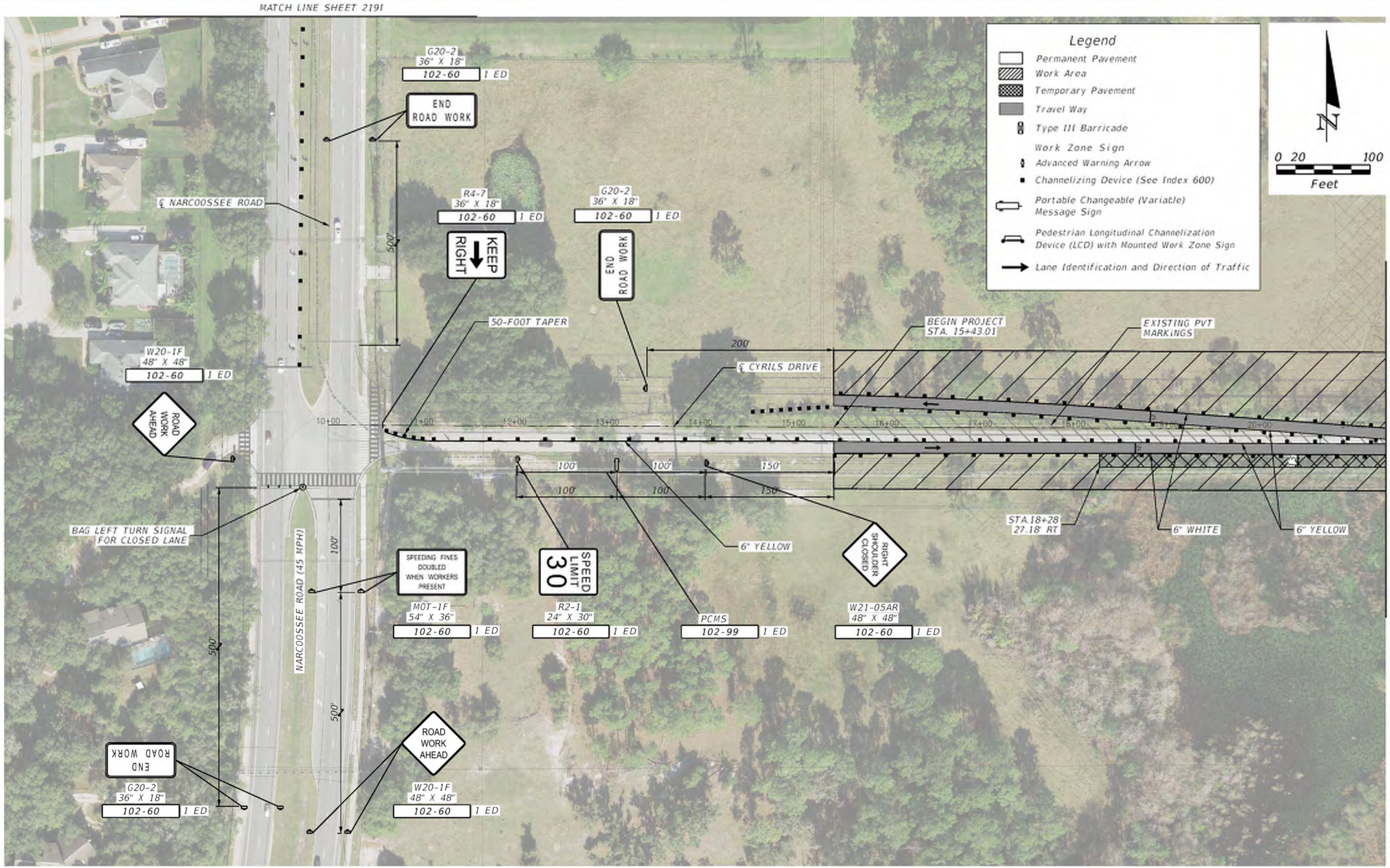

THE OFFICIAL RECORD OF THIS SHEET IS THE ELECTRONIC FILE DIGITALLY SIGNED AND SEALED UNDER RULE 61G15-23.004, F.A.C.

5/5/2023 3:26:51 PM kv
P:\21190 Cyrils Dr-Narcossee Rd to Absher Rd-Rd Widening\300_CADD\211901111111\Roadway\TCDSRD 01-Phase 1A.dgn

REVISIONS			
DATE	DESCRIPTION	DATE	DESCRIPTION

TRAFFIC & MOBILITY CONSULTANTS LLC
3101 MAGUIRE BLVD, SUITE 265
ORLANDO, FL 32803
OFFICE: (407) 531-5332
FAX: (407) 531-5331
AYMAN H. AS-SAIDI, P.E. 56849
CERTIFICATE OF AUTHORIZATION: 30024

OSCEOLA COUNTY

PHASE-1A

TEMPORARY TRAFFIC CONTROL PLAN

SHEET NO.
220

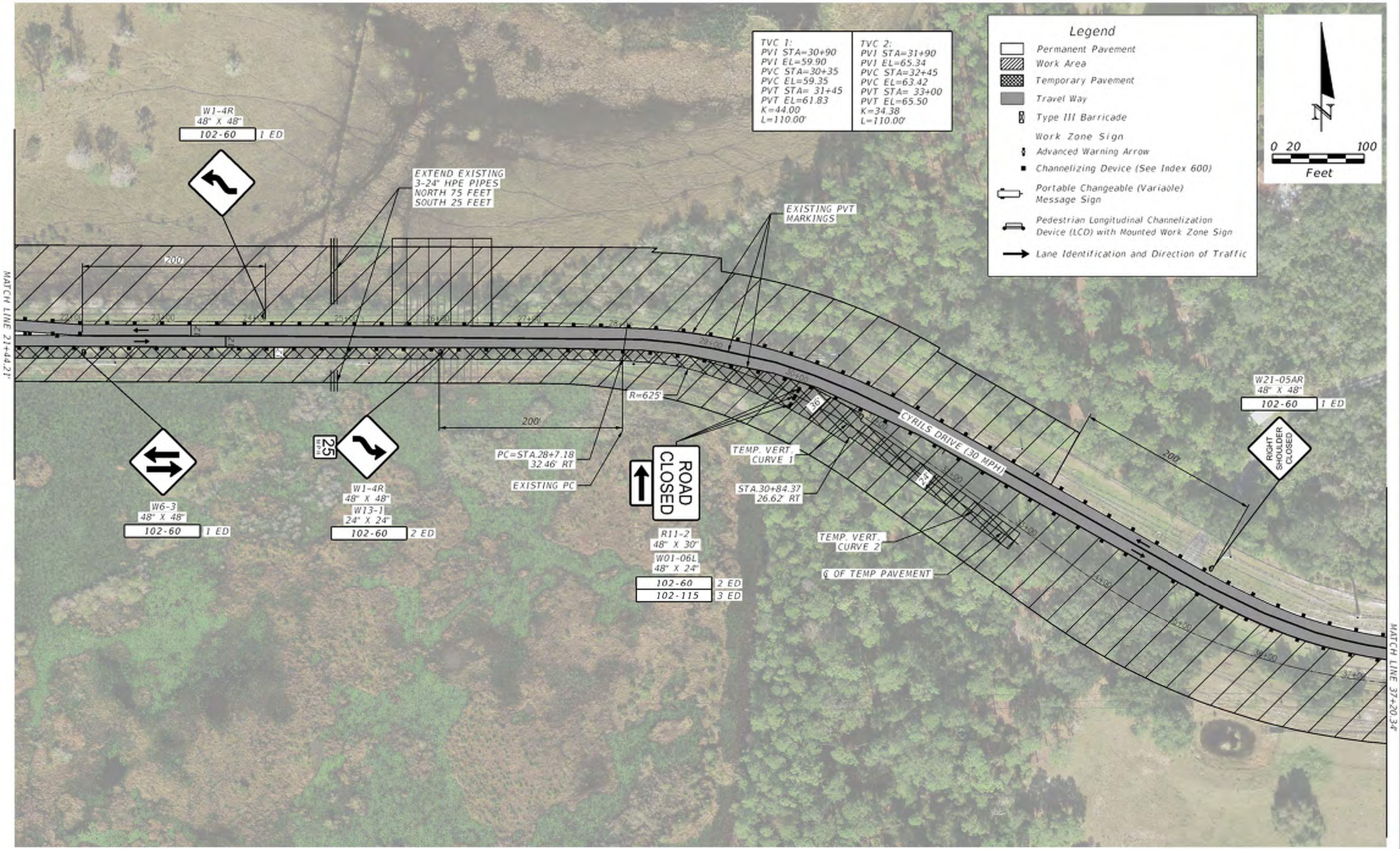

REVISIONS			
DATE	DESCRIPTION	DATE	DESCRIPTION

TRAFFIC & MOBILITY CONSULTANTS LLC
3101 MAGUIRE BLVD, SUITE 265
ORLANDO, FL 32803
OFFICE: (407) 531-5332
FAX: (407) 531-5331
AYMAN H. AS-SAIDI, P.E. 56849
CERTIFICATE OF AUTHORIZATION: 30024

OSCEOLA COUNTY

PHASE-1A

TEMPORARY TRAFFIC CONTROL PLAN

SHEET NO. 221

THE OFFICIAL RECORD OF THIS SHEET IS THE ELECTRONIC FILE DIGITALLY SIGNED AND SEALED UNDER RULE 61G15-23.004, F.A.C.

5/5/2023 3:28:22 PM kv
P:\21190 Cyrils Dr-Narcossee Rd to Absher Rd-Rd Widening\300_CADD\21190111111\Roadway\TCDSBD 01-Phase 1A.dgn

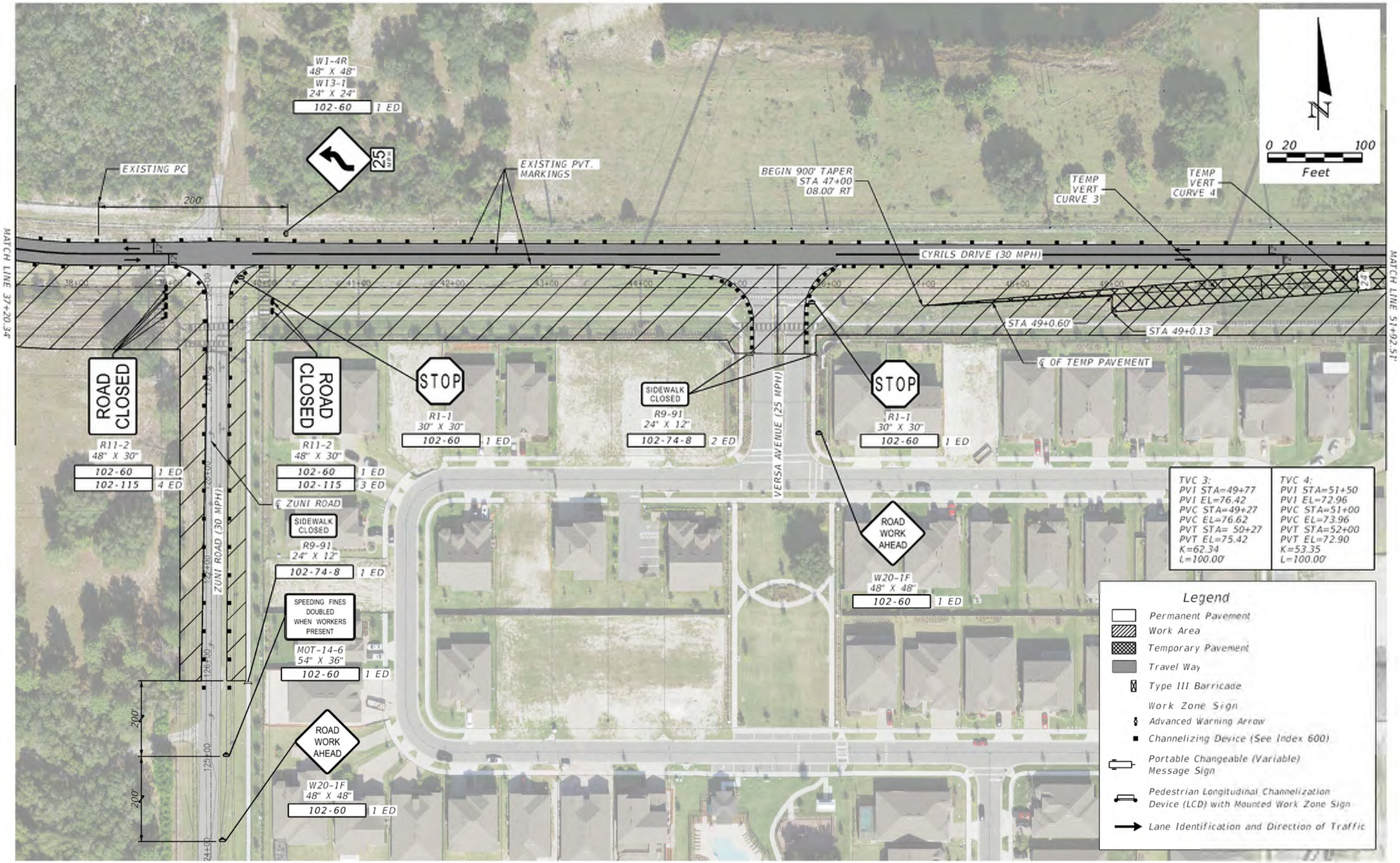

REVISIONS			
DATE	DESCRIPTION	DATE	DESCRIPTION

TRAFFIC & MOBILITY CONSULTANTS LLC
3101 MAGUIRE BLVD, SUITE 265
ORLANDO, FL 32803
OFFICE: (407) 531-5332
FAX: (407) 531-5331
AYMAN H. AS-SAIDI, P.E. 56849
CERTIFICATE OF AUTHORIZATION: 30024

OSCEOLA COUNTY

PHASE-1A

TEMPORARY TRAFFIC CONTROL PLAN

SHEET NO. 222

THE OFFICIAL RECORD OF THIS SHEET IS THE ELECTRONIC FILE DIGITALLY SIGNED AND SEALED UNDER RULE 61G15-23.004, F.A.C.

5/5/2023 3:29:08 PM kv
P:\21190 Cyrils Dr-Narcissee Rd to Absher Rd-Rd Widening\300_CADD\211901111\Roadway\TCD5RD 01-Phase 1A.dgn

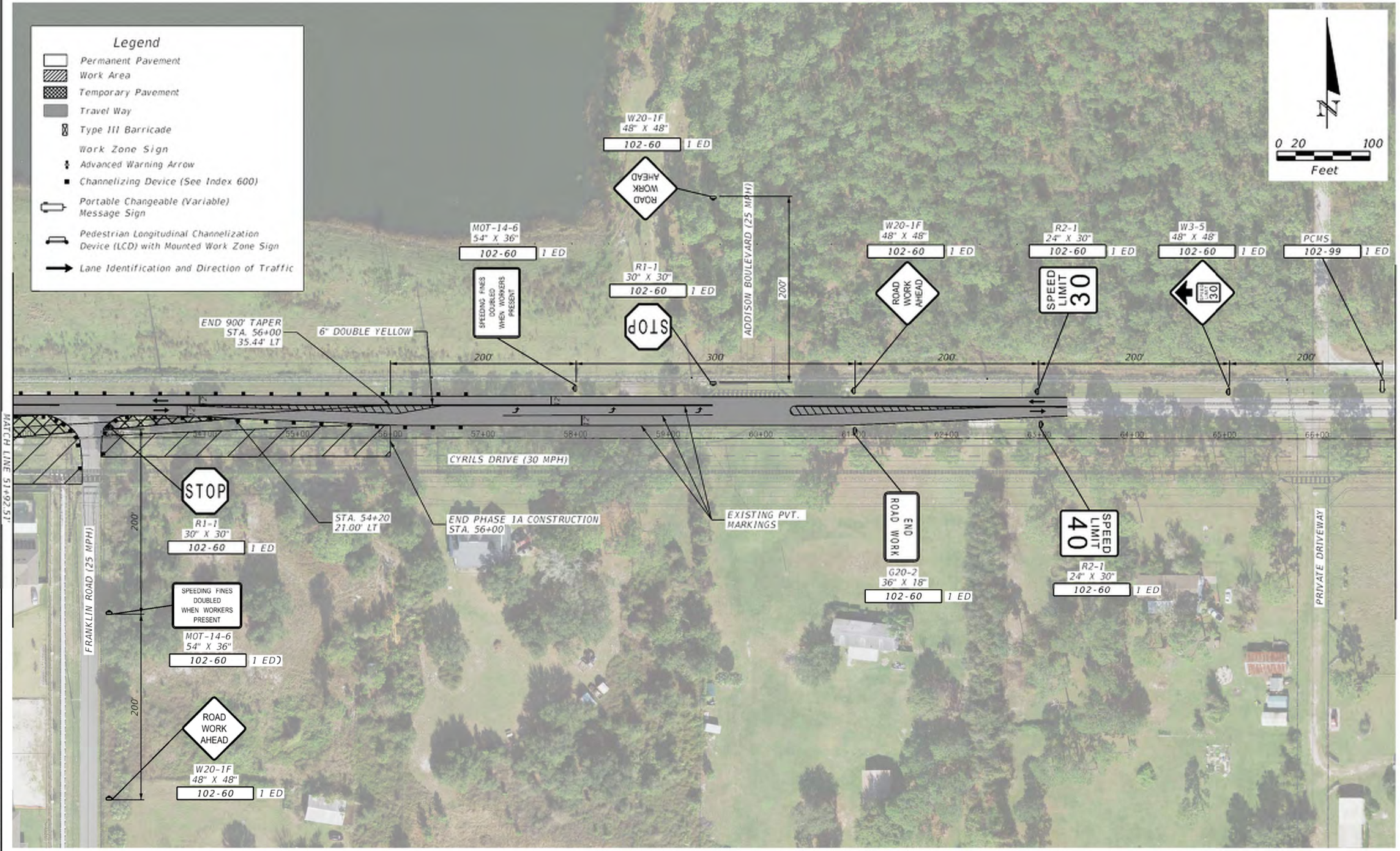

REVISIONS			
DATE	DESCRIPTION	DATE	DESCRIPTION

TMC Traffic & Mobility Consultants

TRAFFIC & MOBILITY CONSULTANTS LLC
3101 MAGUIRE BLVD, SUITE 265
ORLANDO, FL 32803
OFFICE: (407) 531-5332
FAX: (407) 531-5331
AYMAN H. AS-SAIDI, P.E. 56849
CERTIFICATE OF AUTHORIZATION: 30024

OSCEOLA COUNTY

PHASE-1A

TEMPORARY TRAFFIC CONTROL PLAN

SHEET NO. 223

THE OFFICIAL RECORD OF THIS SHEET IS THE ELECTRONIC FILE DIGITALLY SIGNED AND SEALED UNDER RULE 61G15-23.004, F.A.C.

5/5/2023 3:30:11 PM kv
P:\21190 Cyrils Dr-Narcossee Rd to Absher Rd-Rd Widening\300_CADD\211901111111\Roadway\TCDSRD 01-Phase 1A.dgn

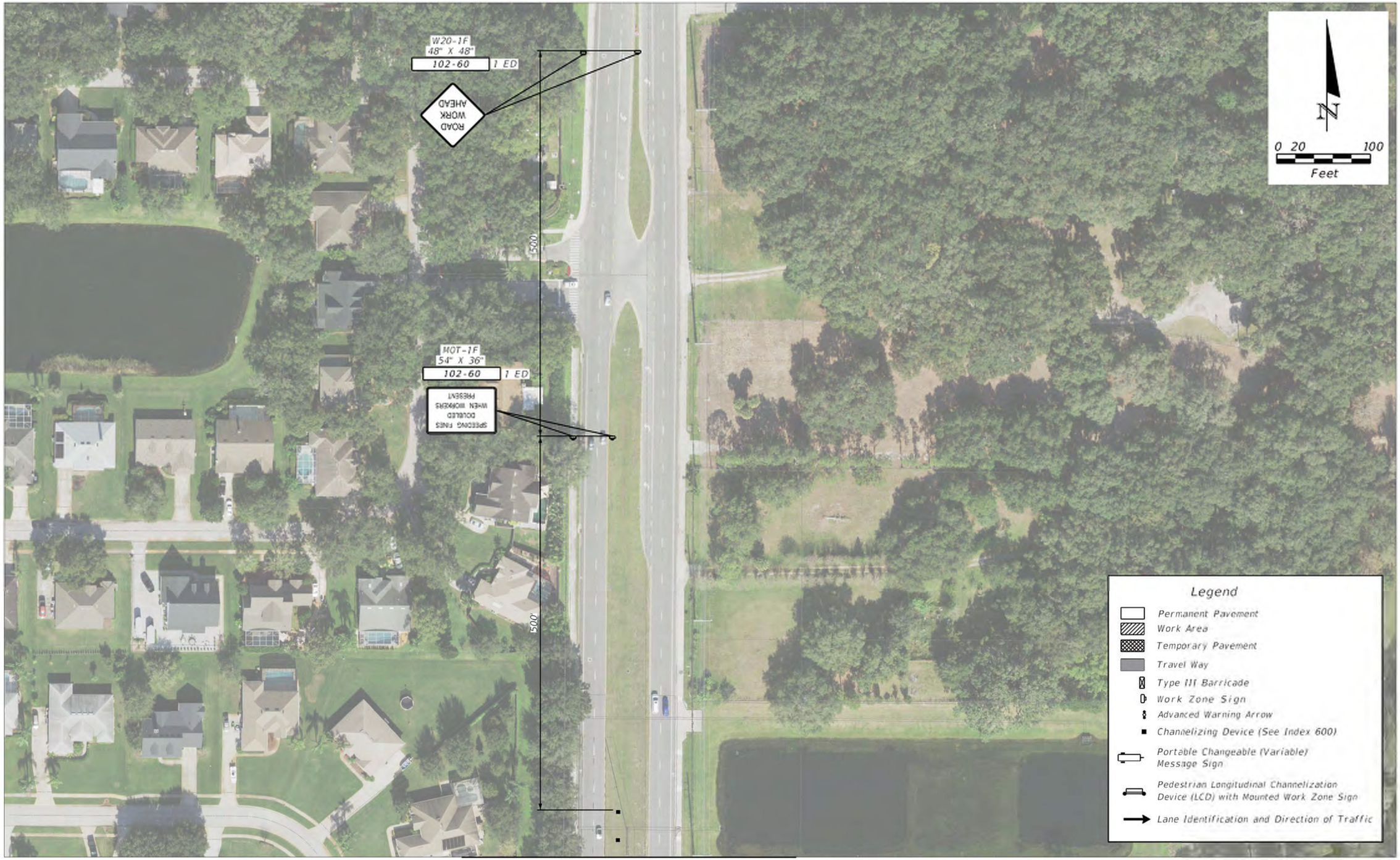

MATCH LINE SHEET 224

REVISIONS			
DATE	DESCRIPTION	DATE	DESCRIPTION

TRAFFIC & MOBILITY CONSULTANTS LLC
3101 MAGUIRE BLVD, SUITE 265
ORLANDO, FL 32803
OFFICE: (407) 531-5332
FAX: (407) 531-5331
JEREMY M. CROWE, P.E. 77064
CERTIFICATE OF AUTHORIZATION: 30024

OSCEOLA COUNTY

PHASE-1B

TEMPORARY TRAFFIC CONTROL PLAN

SHEET NO. 223A

THE OFFICIAL RECORD OF THIS SHEET IS THE ELECTRONIC FILE DIGITALLY SIGNED AND SEALED UNDER RULE 61G15-23.004, F.A.C.

5/5/2023 3:52:42 PM kv
P:\21190 Cyrils Dr-Narcossee Rd to Absher Rd-Rd Widening\300_CADD\21190111111\Roadway\TCDSBD 01-Phase 1B.dgn

MATCH LINE SHEET 223A

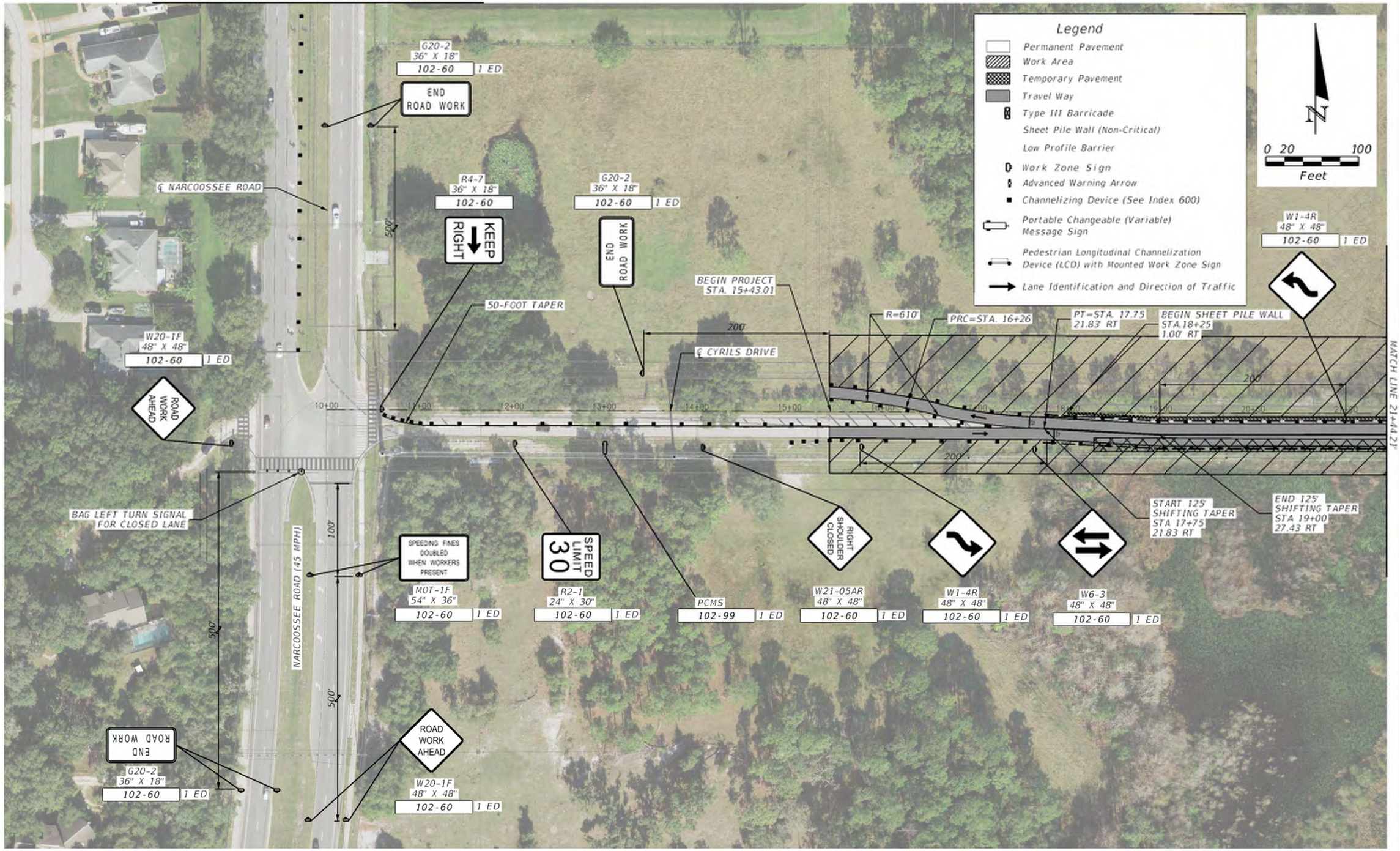

REVISIONS			
DATE	DESCRIPTION	DATE	DESCRIPTION

TRAFFIC & MOBILITY CONSULTANTS LLC
3101 MAGUIRE BLVD, SUITE 265
ORLANDO, FL 32803
OFFICE: (407) 531-5332
FAX: (407) 531-5331
JEREMY M. CROWE, P.E. 77064
CERTIFICATE OF AUTHORIZATION: 30024

OSCEOLA COUNTY

PHASE-1B

TEMPORARY TRAFFIC CONTROL PLAN

SHEET NO. 224

THE OFFICIAL RECORD OF THIS SHEET IS THE ELECTRONIC FILE DIGITALLY SIGNED AND SEALED UNDER RULE 61G15-23.004, F.A.C.

5/5/2023 3:53:10 PM kv
P:\21190 Cyrils Dr-Narcossee Rd to Absher Rd-Rd Widening\300_CADD\21190111111\Roadway\TCDSBD 01-Phase 1B.dgn

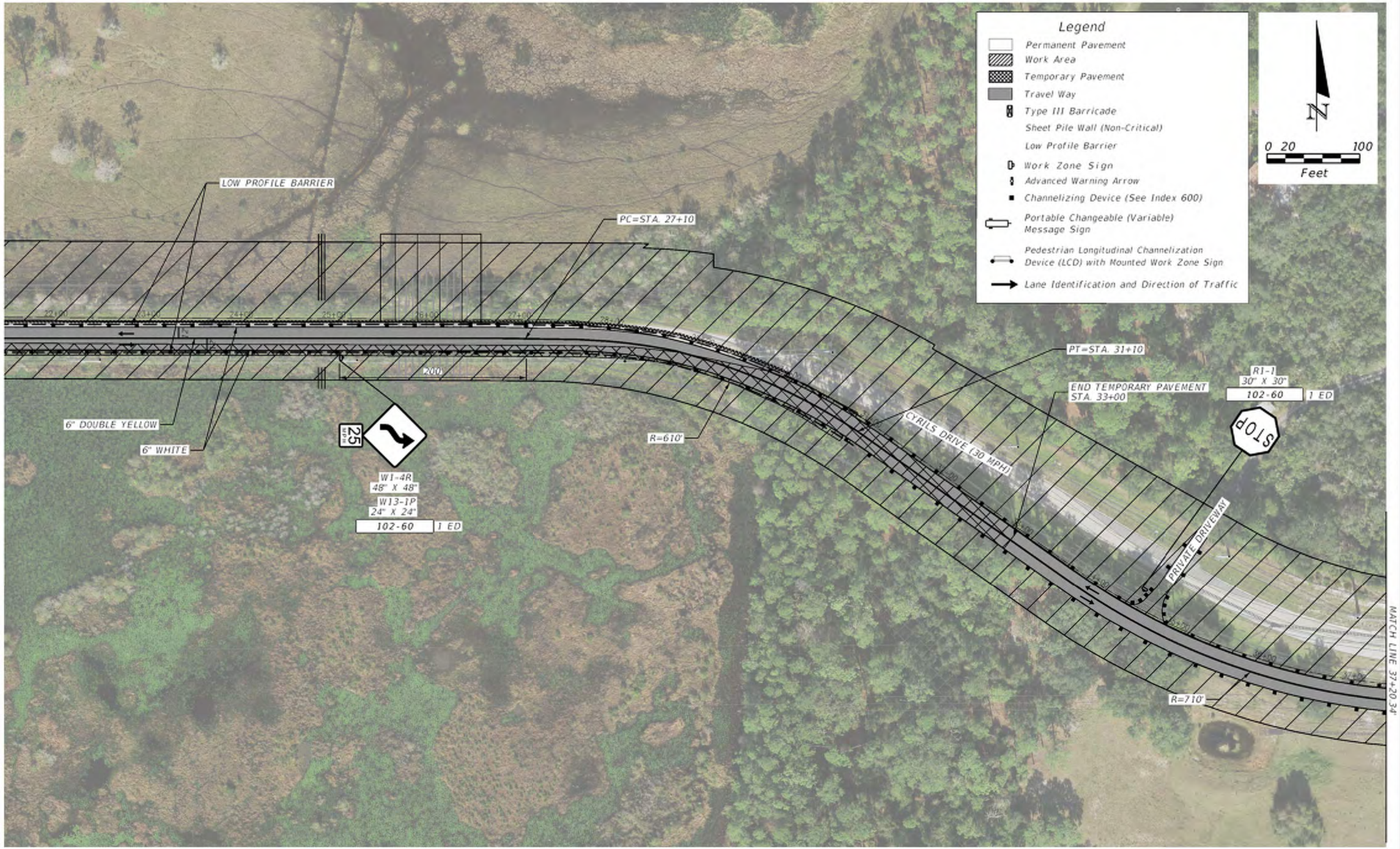

THE OFFICIAL RECORD OF THIS SHEET IS THE ELECTRONIC FILE DIGITALLY SIGNED AND SEALED UNDER RULE 61G15-23.004, F.A.C.

5/5/2023 3:53:44 PM kv
P:\21190 Cyrils Dr-Narcossee Rd to Absher Rd-Rd Widening\300_CADD\21190111111\Roadway\TCDSBD 01-Phase 1B.dgn

REVISIONS			
DATE	DESCRIPTION	DATE	DESCRIPTION

TRAFFIC & MOBILITY CONSULTANTS LLC
3101 MAGUIRE BLVD, SUITE 265
ORLANDO, FL 32803
OFFICE: (407) 531-5332
FAX: (407) 531-5331
JEREMY M. CROWE, P.E. 77064
CERTIFICATE OF AUTHORIZATION: 30024

OSCEOLA COUNTY

PHASE-1B

TEMPORARY TRAFFIC CONTROL PLAN

SHEET NO.
225

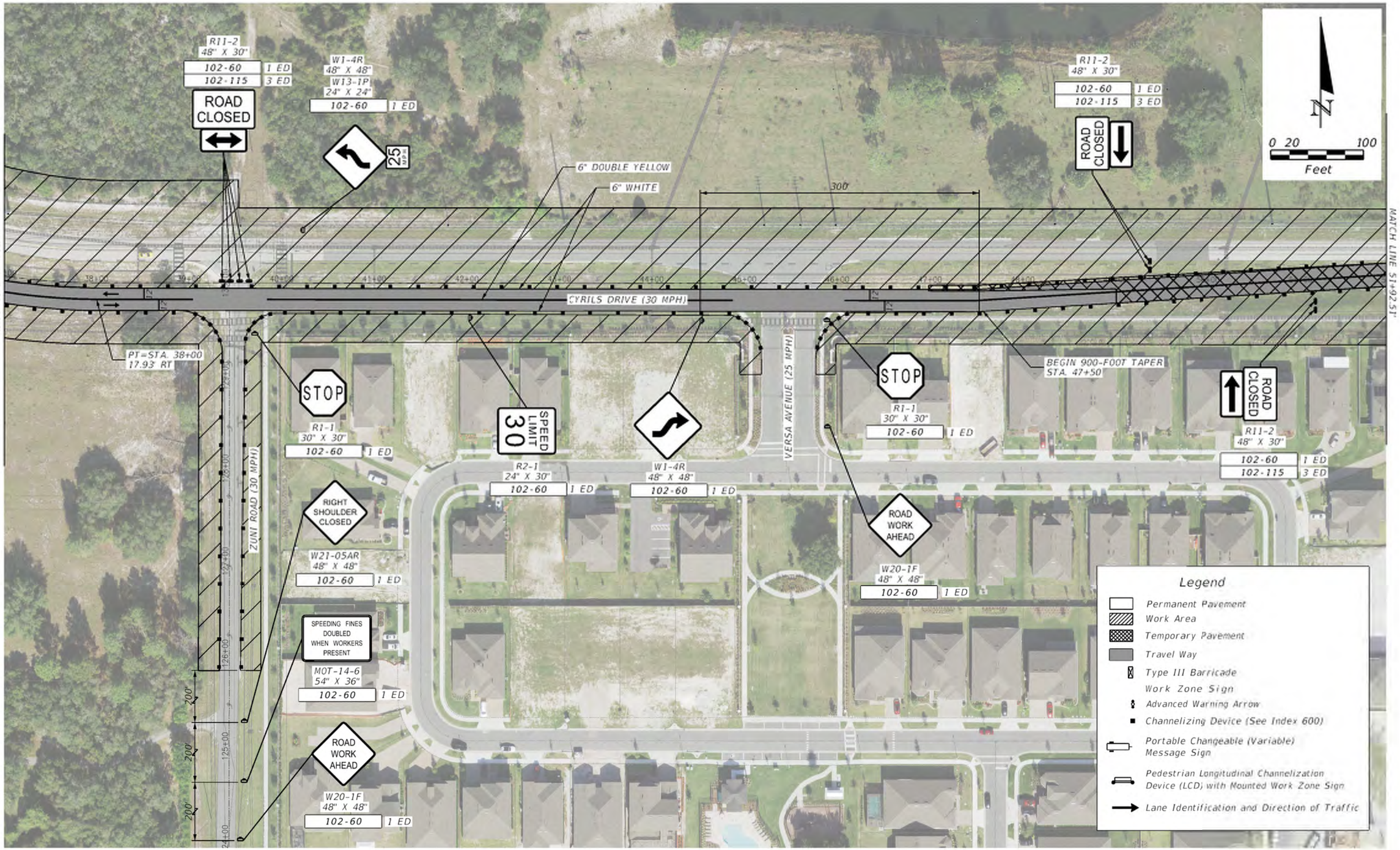

THE OFFICIAL RECORD OF THIS SHEET IS THE ELECTRONIC FILE DIGITALLY SIGNED AND SEALED UNDER RULE 61G15-23.004, F.A.C.

5/5/2023 3:59:09 PM kv
P:\21190 Cyrils Dr-Narcossee Rd to Absher Rd-Rd Widening\300_CADD\21190111111\Roadway\TCDSRD 01-Phase 1B.dgn

REVISIONS			
DATE	DESCRIPTION	DATE	DESCRIPTION

TMC Traffic & Mobility Consultants

TRAFFIC & MOBILITY CONSULTANTS LLC
3101 MAGUIRE BLVD, SUITE 265
ORLANDO, FL 32803
OFFICE: (407) 531-5332
FAX: (407) 531-5331
JEREMY M. CROWE, P.E. 77064
CERTIFICATE OF AUTHORIZATION: 30024

OSCEOLA COUNTY

PHASE-1B

TEMPORARY TRAFFIC CONTROL PLAN

SHEET NO. 226

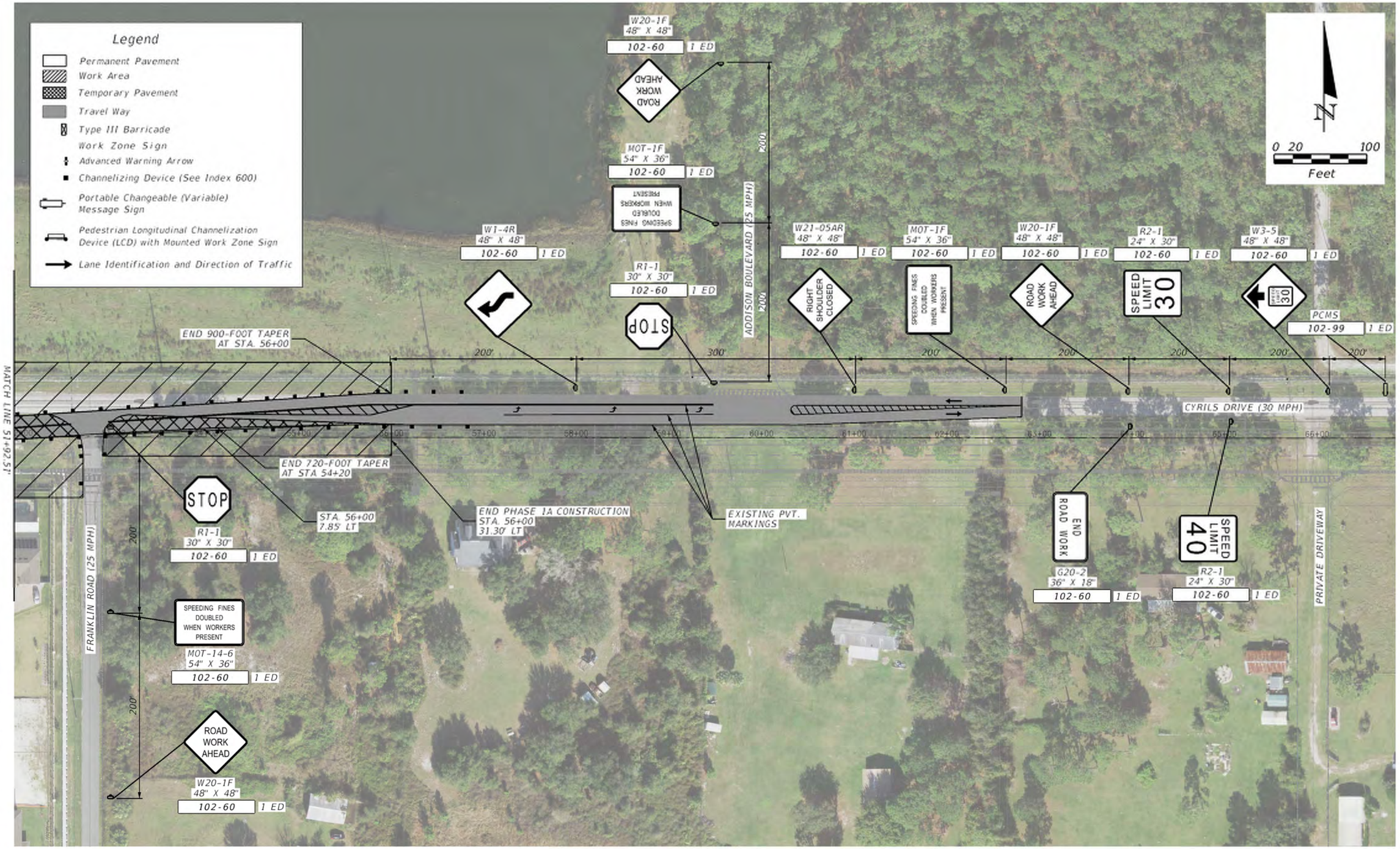

REVISIONS			
DATE	DESCRIPTION	DATE	DESCRIPTION

TMC Traffic & Mobility Consultants

TRAFFIC & MOBILITY CONSULTANTS LLC
3101 MAGUIRE BLVD, SUITE 265
ORLANDO, FL 32803
OFFICE: (407) 531-5332
FAX: (407) 531-5331
JEREMY M. CROWE, P.E. 77064
CERTIFICATE OF AUTHORIZATION: 30024

OSCEOLA COUNTY

PHASE-1B

TEMPORARY TRAFFIC CONTROL PLAN

SHEET NO. 227

THE OFFICIAL RECORD OF THIS SHEET IS THE ELECTRONIC FILE DIGITALLY SIGNED AND SEALED UNDER RULE 61G15-23.004, F.A.C.

5/5/2023 4:05:10 PM kv
P:\21190 Cyrils Dr-Narcossee Rd to Absher Rd-Rd Widening\300_CADD\211901111111\Roadway\TCDSRD 01-Phase 1B.dgn